REV	DESCRIPTION	DRAWN BY	APPROVED	DATE
01	CREATED DRAWING	ACW	ACW	11/06/23

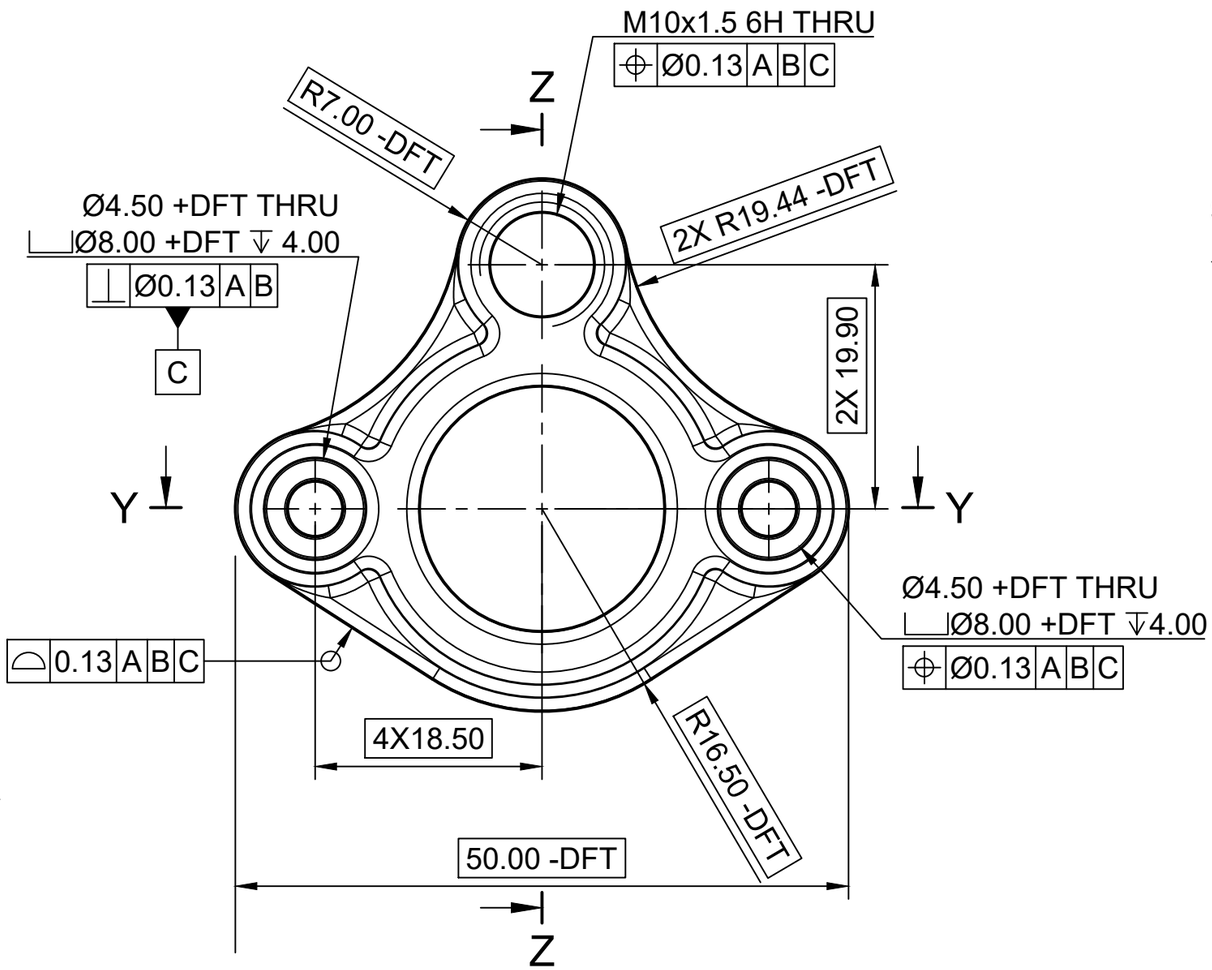

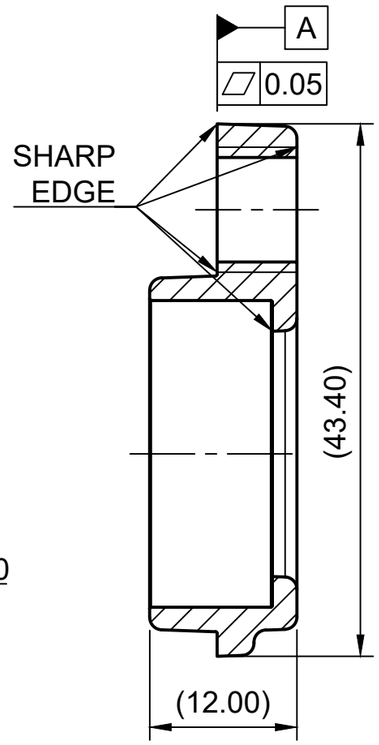

Z-Z

SCALE: 1:1

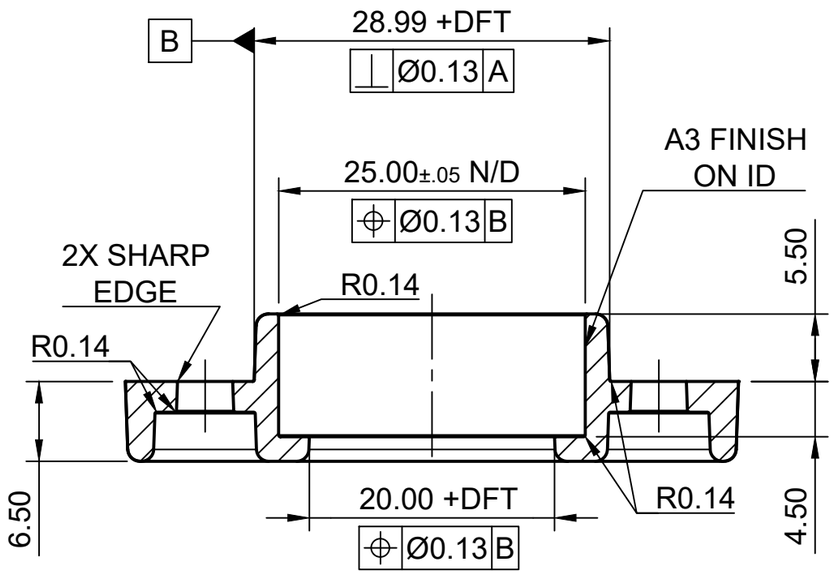

Y-Y

NOTES:

1. MATERIAL: RTP 2205 HF TFE 15, NATURAL PEEK - GLASS FIBER 30% - PTFE 15% - HIGH FLOW
2. FINISH: D1 EXCEPT WHERE NOTED
3. DRAFT: +DFT= +2°, -DFT=-2°, N/D = NO DRAFT
4. CORNERS: R1.00 UNLESS OTHERWISE SPECIFIED.

BRIDGE PRODUCT DEVELOPMENT

THIRD ANGLE PROJECTION

UNLESS OTHERWISE SPECIFIED:
DIMENSIONS ARE IN mm
TOLERANCES ARE:
X.X = ±0.2
X.XX = ±0.13
X.XXX = ±0.05
ANGULAR = ±1°
ALL SURFACES =
⌓ 0.25 A B C

DESCRIPTION:
FLANGED BEARING HOUSING

SIZE:	PART NUMBER:	REV:
A3	030002	01

SCALE: 2:1 SHEET: 1/1